California State University, Northridge

THE RELATIVE EFFECTIVENESS OF FOUR TYPOGRAPHIC CUEING TECHNIQUES

A thesis submitted in partial satisfaction of the requirements for the degree of Master of Arts in

Psychology

by

Jan P. Charles

August, 1980

The Thesis of Jan P. Charles is approved:

Dr. Tyler Blake July 28 ,1980

Dr. William Wilsoncroft July 28 ,1980

Dr. Mark Sanders, Chairman July 28 ,1980

California State University, Northridge

Dedication

This thesis is dedicated to my parents, whose support in every sense of the word, made this dream come true. I would especially like to thank my mother for the hours of typing throughout my schooling, to thank my father for the constructive criticism which was always welcomed and both of them for their endless enthusiasm and moral support.

Table of Contents

ABSTRACT

THE RELATIVE EFFECTIVENESS OF

FOUR TYPOGRAPHIC CUEING TECHNIQUES

by

Jan P. Charles

Master of Arts in Psychology

Typographic Cueing is a method whereby typographic methods such as changing print styles are used to emphasize or "cue" specific information. The independent variables used in this experiment were 1) cued or noncued material, 2) the method of typographic cueing (capitalizing, italicizing, boldfacing and underlining) and 3) the type of material cued (principles, examples or trivia). The dependent measure was the number of errors subjects made to written questions. Within each article the subjects read twelve statements selected for possible cueing. Four were principles, four were examples and four were trivia. Two statements of the same type were cued in each article. The remaining ten statements were considered as noncued, adjacent material. Each

subject read three different articles, all having the same method of cueing, but each cueing a different type of material.

Subjects were screened for reading ability. Each subject then began the three experimental trials. Each trial consisted of reading a 300 word article once, and then, without being allowed to refer back to the article, answering the twelve true/false and multiple choice questions on the article.

Subjects were randomly assigned to conditions. The articles and material type cued were counterbalanced across subjects.

All four cueing techniques were found to produce a significant isolation (cueing) effect. There were no significant differences between the isolation effect created by the different cueing techniques on the cued material.

Further analyses suggested that the capitalized and italicized print cueing techniques resulted in a greater retention of noncued material. No significant differences were found among these cueing techniques. Material type cued was not a significant variable for comparing the cueing techniques.

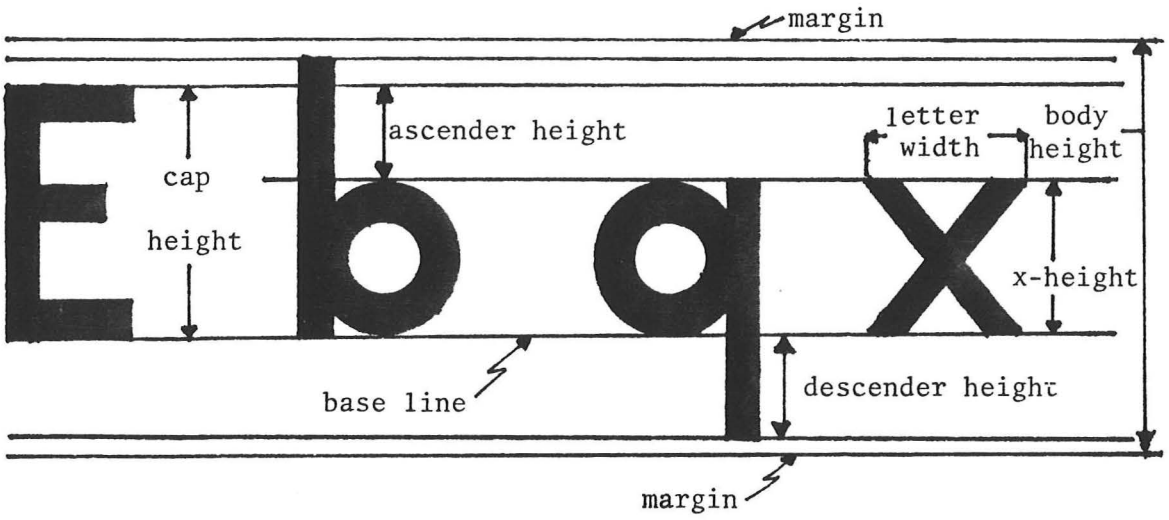

Figure 1

Type face measurements (based upon Poulton,1970,p.156).

height of the capital letters.

- the x-height is the height of the rounded part of the lower case letters, thus the height of the letter "x".
- the ascender height is the height of the type leg or ascender from the x-height.
- the descender height is the height of the type leg or descender from the x-height.
- the ascender and descender lines are the lines marked by the ascender and descender heights.
- the body size or point size is the size of the metal casting for the type which is the height between the ascender and descender heights plus a small interline margin.
- the letter width is the actual line width of each letter.

Type Size Research

Although the plethora of type measurements outlined above would suggest an accurate science, there are many problems that still plague type style studies. Some of these problems were outlined by Poulton (1970,p.156). They include the following:

- equating different designs of typeface on their body height does not equate the x-height of the letters.
- different typeface designs have 1) different line margins or separations, 2) different positions of the base line relative to the margins, and 3) different heights and widths of the capital print.

In order to circumvent some of the problems associated with comparing type styles, Poulton used the x-height as a standard. This offered several advantages. The x-height did not depend upon the interline

spacing. Furthermore, in an earlier study, Poulton (1969) found that the x-height appears to govern apparent size of a typeface and to contain the critical information relative to the character identity. Thus, it appears that the x-height is the most critical type characteristic that should be controlled when comparing different type styles.

The results of much of the typographic research have led to generalizations such as those proposed by Hartley and Burnhill's Fifty Guide-Lines for Improving Instructional Text (1977). The guide-lines include a suggestion that cueing with italic, bold or underline is helpful for "key terms, new vocabulary and phrases" (p.66). Interestingly, the research findings up to that time had not dealt with italics as a cueing technique.

Isolation Effect Research

The isolation effect (Cashen and Leicht,1970) refers to an increase in recall resulting from the material being offset or somehow contrasted (cued) from the background material. Thus when a sentence segment is cued, the cued material contrasts with the remainder of the text, i.e., the "background" text. The cued material is thus isolated from the background text and thereby produces an isolation effect.

Underline cueing research.

Research in isolation effects typically addresses the effect of isolation on learning and retention. During the 1970's these studies focused almost exclusively on the effect of underlining as a method of isolating text and material. Cashen and Leicht (1970) concluded that the isolation effect created by highlighting or isolating the cued material from the background material by underlining was a consistent effect. They

studied the isolation effect created by underlining material and tested for recall by a class examination. Such "real life" or field studies are often more useful than laboratory studies even though field studies are generally plagued by uncontrolled variables such as uncontrolled subject behavior between experimental sessions. As in the case of Cashen and Leicht (1970) where there was no control or observation of the amount of interaction between the experimental groups.

Personal interaction among subjects between separate experimental conditions can be an important source of variance when an experiment is carried out throughout a semester. Yet Cashen and Leicht did not indicate that such an interaction was controlled. In addition, the amount of study time allowed for the reading given to the students or the conditions for studying were also not controlled. Thus the subjects were free to study as much (or as little) as they wished as well as with whomever they wished, even across experimental groups.

The results of Cashen and Leicht, in spite of their design limitations did however, support the isolation effect research. The underline condition resulted in a significant increase in the number of correct responses for both the underlined material and the adjacent, non-cued material over that found for the no cueing control conditions.

Idstein and Jenkins (1972) used a 6,000 word passage to compare subject generated underlining with repetitive reading as an aid to recall after an extended period of time. The experimental groups received two reading sessions. The initial study period was 50 minutes long for both groups. The average reader could have read the passage in approximately 30 minutes and they were apparently not prevented from re-reading the

material. Thus, it appears that the comparison was really between underlined material where both groups were able to repetitively read.

In the second session, just prior to testing, 15 minutes were given to the subjects in the two experimental conditions to review the material. The results for the underlined condition were not significantly different from the nonunderlined material. Idstein and Jenkins concluded that subject-generated underlining was not better than repetitive reading for recall. This must be accepted with reservations since, as discussed earlier, they may have been investigating the isolation effect of subject-generated underlining when repetitive reading was allowed. In fact, the lack of control for the amount of underlining done by each subject may have minimized the effect of underlining as an "isolation" agent. For example, Idstein and Jenkins reported that several subjects underlined almost every line.

Subject-generated underlining was compared to experimenter-generated underlining by Glynn and Di Vesta (1979). Glynn and Di Vesta, however, controlled the amount of information underlined by the subjects and found that under such conditions recall was not significantly different between subject and experimenter-generated underlining.

The majority of the studies (Fowler and Barker,1974;Rickards and August,1975;Glynn and Di Vesta,1979) reported no significant difference in recall for the experimenter-generated underlining than for the subject-generated underlining conditions. Rickards and August found that subjects who were required to underline unimportant information had the poorest recall of the underlined and nonunderlined material. It appears that the content of the underlining may be the determining factor in

increasing recall rather than who did the underlining.

Glynn and Di Vesta compared one typographic cueing method, underlining, to "instructional" cueing, a method of cueing which consisted of stating the instructional objectives in a printed form for the subjects. Not only did they find that the typographic cueing method resulted in increased recall, but that the typographic cueing method was apparently more important to the subjects than were the instructional cues.

Additional support for the isolation effect is provided by Leicht and Cashen (1972). The major contribution of this study was that they categorized the information underlined. The categorization allowed a comparison of the recall scores for each type of information. For each of the three material types, the highest mean number of correctly recalled items occurred when that type of material was underlined. For each condition, regardless of the type of material underlined, there was a marginally significant trend that more principles than examples were recalled, and that more examples than trivia were recalled correctly. Thus, even when unimportant or trivia information was underlined, more examples of key ideas and even more principles or key ideas were recalled correctly. This trend was also evident in the control condition. The type of material, therefore, appears to be a factor in the isolation effect produced by underlining and could perhaps be an important factor with other cueing techniques. This might be especially true if other techniques were to produce more powerful isolation effects than that created by the underlining technique.

Underlining cueing, although not the only cueing method explored, is certainly the most studied technique, if the abundance of the re-

search is a valid measure. An alternative approach to cueing was utilized in a study by Fowler and Barker (1974) . They studied the effect of subject-generated underlining (in red ink) to the effects of subject-generated highlighting (or accenting) i.e., the subject produced a colored stroke over the selected printing with an unsaturated yellow marker. This yellow accent cueing method proved to enhance recall more than did the underlining cueing method.

Hershberger and Terry (1965) reported significant improvements in recall of material highlighted by the use of print color. They employed red print as a highlight against black printed material as one condition in a complex experiment. The effect was most pronounced for what they called "core content" e.g. key words and examples as opposed to "enrichment content" e.g., interesting sidelights. The other cueing condition was a complex combination of color, capitalized and underlined print utilized for cueing both core and enrichment content. Thus the experimental design makes the results difficult to interpret.

One of the cueing techniques available to printers is changing the print style in order to isolate the key material. Foster and Coles (1977) studied two print changes- capitalized print and boldfaced print- on the recall of material. Although only principles were cued, recall of material in boldfaced print was significantly better than either the capital print or the control condition (standard text). The recall for the capital print condition was significantly better than for the control condition except that the recall of the adjacent, noncapital material was inferior to the recall of the same material in the other conditions, including the control.

This raises one of the more controversial points of cueing research that is, the effect of the cueing upon the noncued, adjacent material. The controversy concerns whether the improved recall for the cued material is solely the effect of the cueing or whether it is, at least, partially at the "expense" of the recall of the noncued, adjacent material.

The majority of the studies which reported retention for the noncued materials indicated that the cued material was not learned at the expense of the noncued material (Hershberger and Terry,1965;Cashen and Leicht,1970;Fowler and Barker,1974;Rickards and August,1975;Foster and Coles ,1977). The two studies which reported an effect on noncued recall were Cashen and Leicht (1972) and Glynn and Di Vesta (1979). These studies included both subject-generated cueing as well as experimenter-generated cueing in which the subjects knew that important information, or information on which they would be tested was cued. One study, for example, Coles and Foster (1975) reported that no isolation effect was present until the subjects were clearly instructed that the cued material was important.

The length of the passages used in typographic cueing research is another important consideration. As with any variable, there is an optimum (or maximum or minimum) due to the length of the passage. Thus far there has been no systematic study to determine the relationship of passage length and cueing effectiveness.

Size of passage to be read.

Crouse and Idstein (1972) reported two cueing experiments with passage length as a variable. The first experiment was an underlining study using a reading passage of approximately 200 words. No significant

isolation effect was found. It is possible that the materials chosen were too simple and thus any enhanced recall for the underlined condition was lost. Crouse and Idstein did, however, detect an isolation effect when a 6,000 word passage was used in their second experiment.

Passages of more moderate length, ranging from 1,000 to 1,500 words, have also been shown to demonstrate an isolation effect (Idstein and Jenkins,1972;Rickards and August,1975;Coles and Foster,1975;Foster and Coles,1977;Glynn and Di Vesta,1979).

Thus the minimum passage length for the isolation effect to be detected appears to be between 200 and 1,000 words.

In summary, a wide variety of studies on cueing effectiveness have been conducted, e.g., underlining studies, material type studies, and have verified the "isolation effect" phenomenon. The studies have, however, failed to determine which of the cueing techniques is the best or to rank the cueing techniques commonly used for their relative effectiveness. Very few experiments have been conclusive, in part, due to unsound methodologies.

Statement of the problem

This study is concerned with comparing the isolation effect created by four typographic cueing techniques. These techniques are: capitalized printing, boldfaced printing, italicized printing and underlined printing No study to date has directly compared all four methods of cueing. In addition, the isolation effect will be investigated for three types of information: principles, examples and trivia. These categories or information were first used by Leicht and Cashen (1972). Their results suggested possible interactions between information type and cueing techni-

que which could effect the relative effectiveness of the techniques.

It was hyopthesized that there would be a significant enhancement effect for all cueing techniques. The capitalized condition was, however, expected to result in less improvement for material retention than the other cueing techniques (Coles and Foster,1975).

The main effect of the information type was hypothesized to be a linear relationship, such that the more important the material, (such as principles or key terms) the higher the correct recall rate (Hershberger and Terry,1965;Leicht and Cashen,1972). It was hypothesized that interactions between material type and cueing techniques would be found, and thus serve to rank the effectiveness of the cueing techniques.

Method

Subjects

Thirty-six college students served as subjects in this experiment. All, except four, were introductory psychology class students who received credits for their participation. The subjects all spoke English as their first language. Sixteen were males and 20 were females, ranging in age from 18 to 23 years old. None of the subjects had any known, uncorrected visual defects.

Each subject was required to meet two criteria before they were accepted. A test passage had to be read at a "study rate" of at least 60 words per minute and 50% of the comprehension test questions had to be answered correctly. Two students failed to meet both criteria and were not used, and replacements were obtained.

Materials

The materials utilized included four short articles of general

interest and a set of test questions for each article.

Each subject read all four articles. The first served as a reading test as well as a sample trial. The other three articles comprised the three experimental trials. Each trial consisted of reading an article and then answering questions about that article.

Reading test.

A reading test was given to all of the subjects. It consisted of a 300 word article with four test questions. The article was a photocopy of an article cut from a news magazine. The article dealt with one cause of senility (Newsweek,1979) and was taken from an issue several months prior to the study and did not contain any cueing techniques.The print style was smaller than that used in the trial conditions.

The questions for the reading test consisted of two true/false and two multiple choice. The questions tested four principle ideas and were typed using a standard elite typewriter.

Articles.

Three prose articles were utilized for experimental materials. All three articles were approximately 300 words in length. This length was determined through a pilot study to be of sufficient length for an isolation effect, using underlining, to be apparent. The underlining was chosen for the pilot study since its effects are well documented (Cashen and Leicht,1970;Crouse and Idstein,1972;Coles and Foster,1975;Glynn and Di Vesta,1979).

Each article was used in all four cueing conditions, i.e., boldfaced, italicized, capitalized and underlined. The articles were edited to contain four principles, four examples and four trivia ideas within

the 300 word length. To reduce the possibility of subject familiarity with the articles, each article was at least one year old and dealt with relatively uncommon topics. The articles used covered the topics of river ice problems (Ashton,1979), bonsai tree trunks (Bonsai culture and care of miniature trees,1969) and emperor penguins (Le Maho,1977). The articles, the cued materials and the questions are represented in Appendix A.

Each article was typed, single spaced, in a single column centered on the page. The article format width and length were 3¼" (8.26 cm) by 7¼" (18.42 cm). Although the righthand margin was not right-justified, the line lengths did not vary by more than six letters.

All of the articles were typed using black letters on white paper. Each article was typed using IBM Selectric 12 pitch typing elements. The background type, as well as the underlined, CAPITALIZED and **boldfaced** conditions were typed using the Adjutant element (#1176030). The text of this thesis was typed using that element. The boldface cueing was created by striking each letter approximately seven times. The italic condition was created by using the IBM Selectric element *Light Italic* (#1176014). The articles were then photocopied using a high quality copier. The actual print size which resulted was slightly larger than the original 12 pitch type.

Questions.

Twelve questions were developed for each article. The questions were based on the twelve idea segments identified in each article, one question for each of the four principles, four examples and four trivia statements. Each article had only one set of questions and thus all

subjects received identical tests for each of the articles. Two of the questions pertained to the cued material and the remaining ten questions tested noncued, adjacent material. Approximately equal numbers of true/false and multiple choice questions were used across the cued and noncued information. The pilot study determined that the questions were of modest difficulty and were answered correctly by at least 10% of the subjects.

The questions were typed double spaced using IBM Selectric Prestige Elite element (#1176143).

Experimental Design

This study followed a 4x3x2 factorial design, using a between subjects factor (four levels) of cueing technique, and two within subjects variables, three levels of the information type or cue content and two levels representing cued and noncued material. The structure of the experimental design is depicted in Figure 2.

The data collected consisted of answers to questions on the segments selected for cueing or noncueing. The number of errors, out of possible 12 for each article, was used as the individual subjects' score.

The noncued material established the baseline for evaluating the isolation effects induced by the different cueing techniques. As discussed earlier, each article read by the subjects had two cued sentence fragments contained within the selection. Thus each subject served as their own control since both cued and noncued materials were tested in each article.

The second within subject variable was the information type that was cued and/or tested. The information types employed were the

Isolation Variable	Cueing Technique			
	Capital Letters	Italic Letters	Boldface Letters	Underline Letters
CUED:				
Principles				
Examples				
Trivia				
NONCUED:				
Principles				
Examples				
Trivia				

Figure 2

Experimental Design Structure

categories used by Leicht and Cashen (1972) i.e., principles, examples and trivia. The definitions employed were based on those contained in Webster's Seventh Collegiate Dictionary (1967).

- principle- a comprehensive and basic law or assumption.

  e.g.:"Ice forms when water is cooled to 0°C."(Ashton,p.38)

- example- an instance serving to illustrate a rule or act an an exercise in the application of a rule.

  e.g.:"...use...for transport of goods..."(Ashton,p.38)

- trivia- unimportant matter or details relative to the main concept.

  e.g.:"...levels twice and even more...: (Ashton,p.39)

Four idea segments of each of the above information types were identified in each article. Each idea segment consisted of a sentence fragment of about 5 words in length and of approximately the same grammatical composition. Only two idea segments, of one information type, were cued in any one article version. The remaining two idea segments of that information type were cued in a second version of each condition. Thus there were two versions of each of the three information types for each of the three articles used, making a total of 18 different article-information type versions for each of the four cueing technique condition. This is summarized in Figure 3 for a single article.

Procedure

Nine subjects were randomly assigned to each experimental condition. Each student was first given the reading "test" passage and questions. The reading test also served as a sample trial to familiarize the subjects with the procedure. Each subject was instructed to read

Version Number	Principle				Example				Trivia			
	1	2	3	4	1	2	3	4	1	2	3	4
1	*	*	-	-	-	-	-	-	-	-	-	-
2	-	-	*	*	-	-	-	-	-	-	-	-
3	-	-	-	-	*	*	-	-	-	-	-	-
4	-	-	-	-	-	-	*	*	-	-	-	-
5	-	-	-	-	-	-	-	-	*	*	-	-
6	-	-	-	-	-	-	-	-	-	-	*	*

* denotes cued material

- denotes noncued material

Figure 3

Method of generating the six versions of each article for a cueing technique.

through the passage once, as if studying for a test, and were told that they would answer questions about the article afterwards. The reading speed for each trial was self-paced. If they met the criteria the subjects were then given the experimental trials.

In order to equalize the order of presentation for both the three information types and the three articles, a counterbalanced design was used. The counterbalanced design matrix is shown in Table 1.

The subjects were not permitted to refer back to the article while they were answering the questions. This procedure of reading an article and then answering the questions was repeated for each of the three trials for each subject.

A cover sheet over the first set of questions told the subject to complete each question before proceeding to the next, and to choose the best answer according to the article they had just read.

The subjects were not given any information relative to their performance. All except eight subjects were "run" individually. The eight exceptions were run in pairs, since they arrived simultaneously. No verbal interaction between the subjects run in pairs was permitted.

Each subject took approximately 20 to 25 minutes to complete the reading test and all three trials. Afterwards, the subjects were verbally debriefed and the purpose of the experiment was explained.

Results

General

It was not possible to run an analysis using all four variables - cueing technique, material type, articles and cued vs. noncued - due to the nature of the counterbalancing, since each trial consisted of one

Table 1

Counterbalanced Condition Assignment

Subject	Trial Sequence		
	First	Second	Third
1	1-E	2-T	3-P
2	2-E	3-T	1-P
3	3-E	1-T	2-P
4	1-T	2-P	3-E
5	2-T	3-P	1-E
6	3-T	1-P	2-E
7	1-P	2-E	3-T
8	2-P	3-E	1-T
9	3-P	1-E	2-T

Where:

Articles:

1- River Ice

2- Bonsai

3- Emperor Penguin

Material Type:

P- Principles

E- Examples

T- Trivia

type of material cued within one article. The data was therefore collapsed either across material types or collapsed across articles.

Several analyses were run on the data from this study. The following brief outline describes the analyses performed. Initially a 4x3x2 (cueing technique by material type by cued vs noncued) analysis of variance was used to analyse the data. The lack of significant findings led to a series of analyses based upon a second 4x3x2 (cueing technique by article by cued vs noncued) analysis of variance.

The scores used in all of the analyses were the mean number of errors per subject, since raw scores were not appropriate due to an unequal number of cued and noncued questions.

Material Type Analysis

The means for the 4x3x2 (cueing technique by material type by cued vs noncued) are shown in Figure 4. The analysis of variance is presented in Table 2. The analysis indicated that there was a significant enhancement for recall of material with cueing (the isolation effect) as indicated by a comparison of the cued and noncued material, F (1,8) = 128.054 $p < .01$, $eta^2 = .52$. The cueing techniques were not, however, significantly different from each other, F (3,8) = .431, and there were no significant interactions. Thus each technique appeared to be equally effective in producing an isolation effect. The type of material cued did not discriminate between the cueing techniques used in this experiment, F (2,16) = .2 .

Since there were no significant differences between the material types, another set of analyses, collapsing across material type was initiated. It was considered that the articles may contribute a signifi-

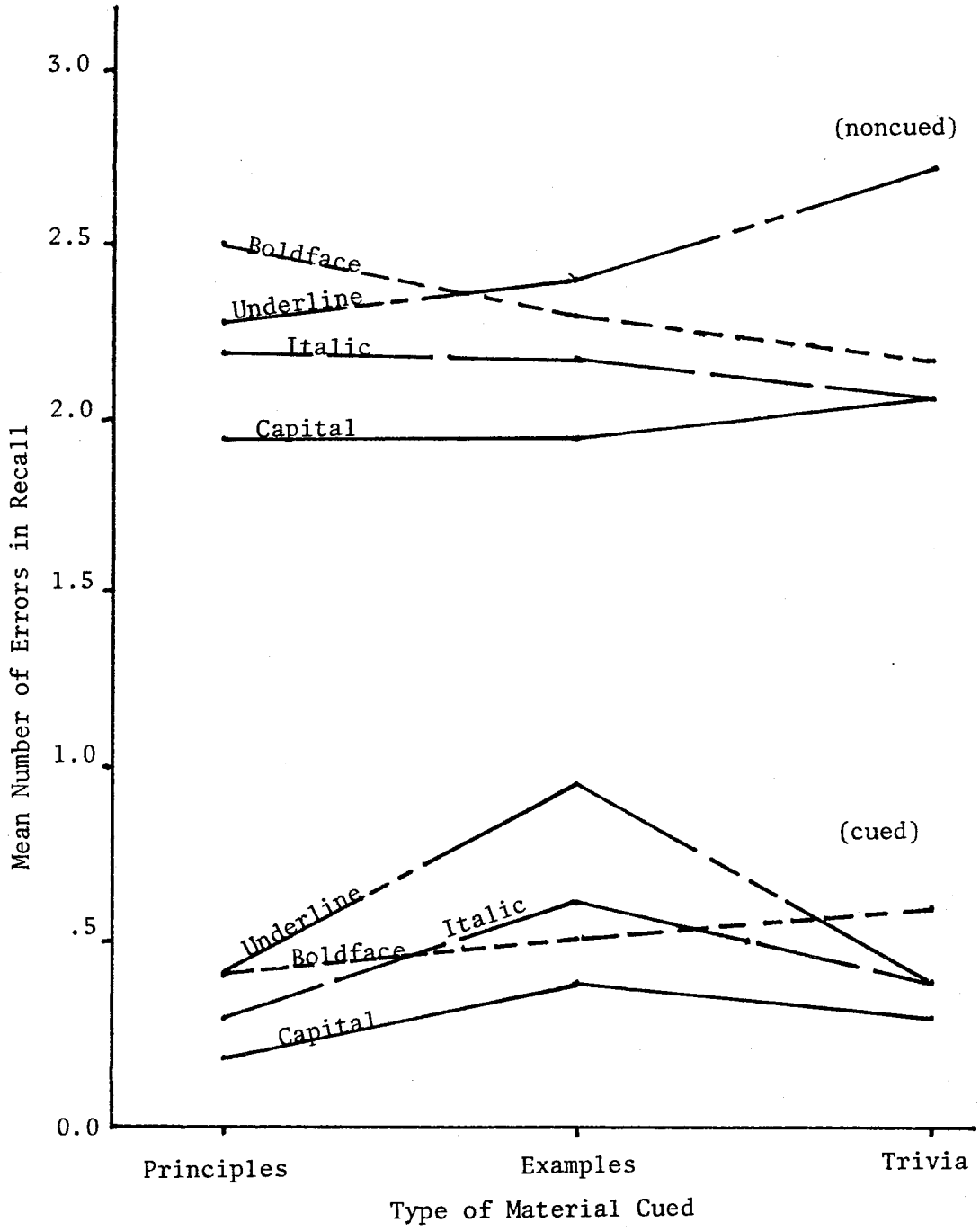

Figure 4

The mean number of errors for each material type by cueing technique in the cued and noncued conditions.

Table 2

ANOVA for Determining an Isolation Effect for the Type of Material Tested and the Cueing Techniques.

Source	df	MS	F
Between Subjects	11		
cueing techniques (A)	3	.506	.431
error	8	1.173	
Within Subjects	60		
cued vs noncued (B)	1	57.103	128.034**
material type (C)	2	.09	.2
AxB	3	.036	.081
AxC	6	.056	.125
BxC	2	.207	.232
AxBxC	6	.092	.052
error (within)	40	1.002	
$error_1$	8	.446	
$error_2$	16	.449	
$error_3$	16	1.783	
Total	71		

**$p < .001$

cant variance and thus could possibly mask the differential efeectiveness of the cueing techniques. The data used in the remainder of the analyses consisted of data collapsed across material types, as shown in Figure 5.

Cued Material Analysis

A 4x3x2 (cueing technique by article by cued vs noncued) analysis of variance produced several significant results, as shown in Table 3. The significant three-way interaction indicated that the combination of the articles, cueing technique and cued vs noncued variables resulted in a unique relationship. The interaction of the cueing technique and cued vs noncued variables changed with the different articles. The second order interactions must thus be interpreted considering the presence of the significant three-way interaction.

Two series of analyses were then used to isolate the simple interaction effects, as suggested by Keppel (1963). Since the main question of this study was the relationship of the cued and noncued materials with the cueing techniques, additional analyses probing the three-way interaction were run within each article. The separate 4x2 (cueing technique by cued vs noncued) analyses are shown in Tables 4,5 and 6. The only significant effect found was the isolation effect (cued vs noncued) which was common to all three analyses. There were no significant interactions within the articles.

The second series of analyses were done to investigate the interactions of cueing techniques and articles at the cued and noncued conditions. Separate 4x3 (cueing technique by article) analyses of variances were run for the cued material and for the noncued material. The

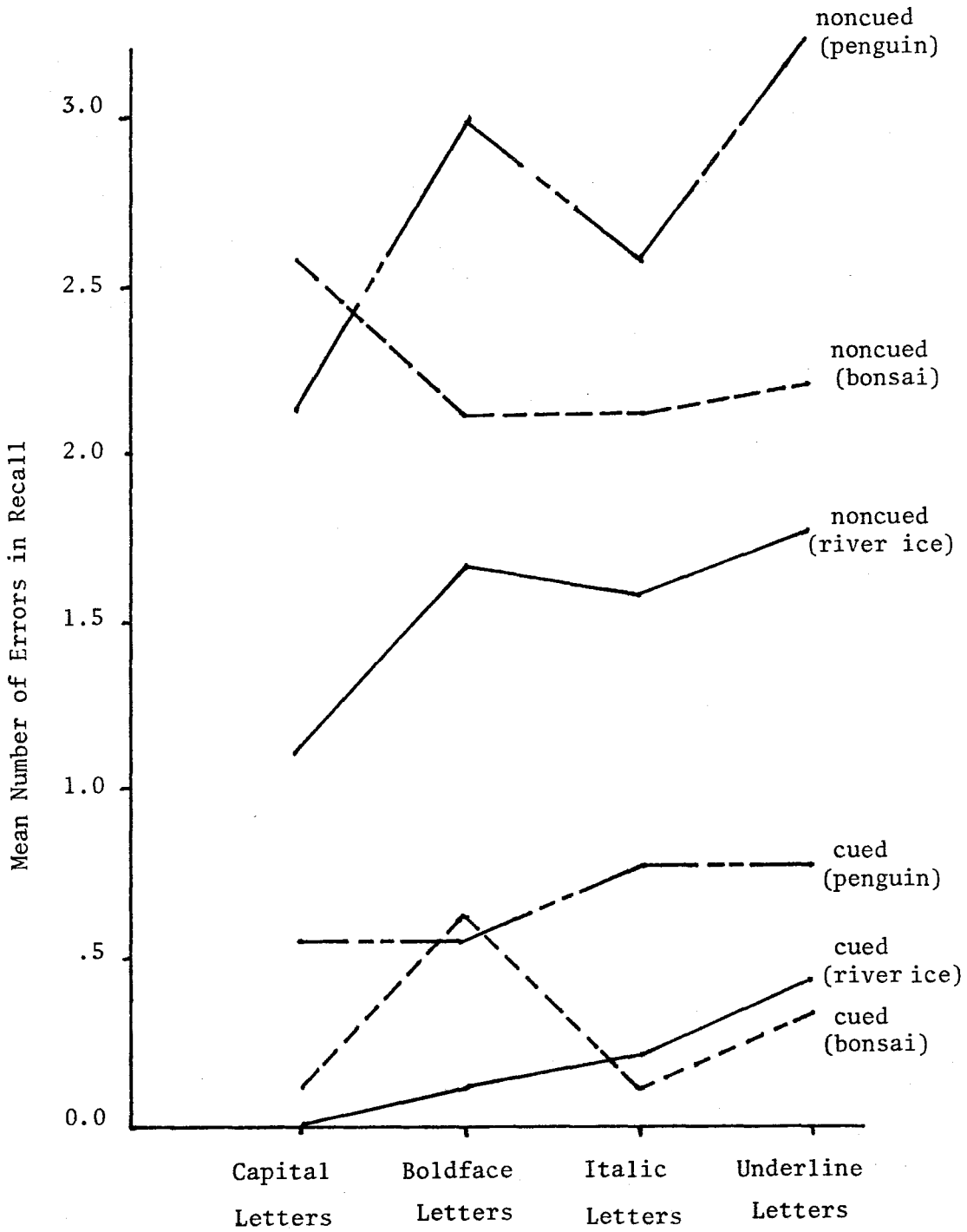

Figure 5

The mean number of errors for each cueing technique and article in both the cued and noncued conditions.

Table 3

ANOVA for Determining a Differential

Cueing Technique Effect

Source	df	MS	F
Between Subjects	11		
cueing technique (A)	3	.51	12.071**
error	8	.042	
Within Subjects	60		
cued vs noncued (B)	1	57.049	328.813***
articles (C)	2	4.218	8.435**
AxB	3	.569	3.218
AxC	6	.163	.327
BxC	2	.871	25.324***
AxBxC	6	1.365	39.709***
error (within)	40		
$error_1$	8	.174	
$error_2$	16	.500	
$error_3$	16	.034	
Total	71		

** $p < .01$

*** $p < .001$

Table 4

ANOVA for Cueing Technique and Cued vs Noncued

Within the River Ice Article.

Source	df	MS	F
Between Subjects	11		
cueing technique (A)	3	.322	.85
error	8	.379	
Within Subjects	12		
cued vs noncued (B)	1	10.655	41.179**
AxB	3	.052	.201
error (within)	8	.259	
Total	24		

** $p < .001$

Table 5

ANOVA for Cueing Technique and Cued vs Noncued

Within the Bonsai Article.

Source	df	MS	F
Between Subjects	11		
cueing technique (A)	3	.085	.341
error	8	.249	
Within Subjects	12		
cued vs noncued (B)	1	22.756	58.536***
AxB	3	.253	.652
error	8	.389	
Total	24		

***$p < .001$

Table 6

ANOVA for Cueing Technique and Cued vs Noncued

Within the Penguin Article.

Source	df	MS	F
Between Subjects	11		
cueing technique (A)	3	.469	1.014
error	8	.462	
Within Subjects	12		
cued vs noncued (B)	1	46.628	85.242***
AxB	3	.562	1.027
error	8	.547	
Total	24		

***$p < .001$

cued condition analysis of variance, presented in Table 7, indicated a significant article by cueing technique interaction, F (3,8) = 5.941 $p < .025$. Figure 6 regraphs the data from Figure 5. In this form it appears that the boldface print in the cued condition is an important source of theinteraction. In order to investigate the interaction further, the data from each of the cueing techniques was selectively removed from the cued analysis data and the analysis rerun on the remaining three techniques. The results are presented in Table 8. The article by cueing technique interaction was eliminated by the removal of the boldface print cueing technique data from the analysis, thus confirming the boldface print as the source of the variance.

The 4x3 (cueing technique by article) analysis of variance of the noncued data resulted in significant main effects of cueing technique and article, as shown by Table 9, but no interactions. The main effects were investigated using Tukey's test for unconfounded means. The marginal means for each cueing technique are presented in Figure 7. The comparisons of the means for cueing techniques collapsed across articles resulted in several significant differences. As expected from an examination of Figure 6, there were several significant differences. The underlined print had significantly more errors than either the italicized or the capitalized print conditions. The boldfaced print was borderline significantly different from the capitalized print. There were no other significant differences. As discussed earlier, the boldfaced print appears to have been minimized by a discrepancy in material preparation.

The significant article main effect, although not analysed, indicated that the articles were different. As illustrated by Figure six

Table 7

ANOVA for the Cued Condition of the Cueing Techniques and Article Effects

Source	df	MS	F
Between Subjects	11		
cueing technique (A)	3	.143	1.212
error	8	.118	
Within Subjects	24		
article (B)	2	.723	21.893***
AxB	6	.109	3.303**
error	16	.033	
Total	35		

** $p < .01$

*** $p < .001$

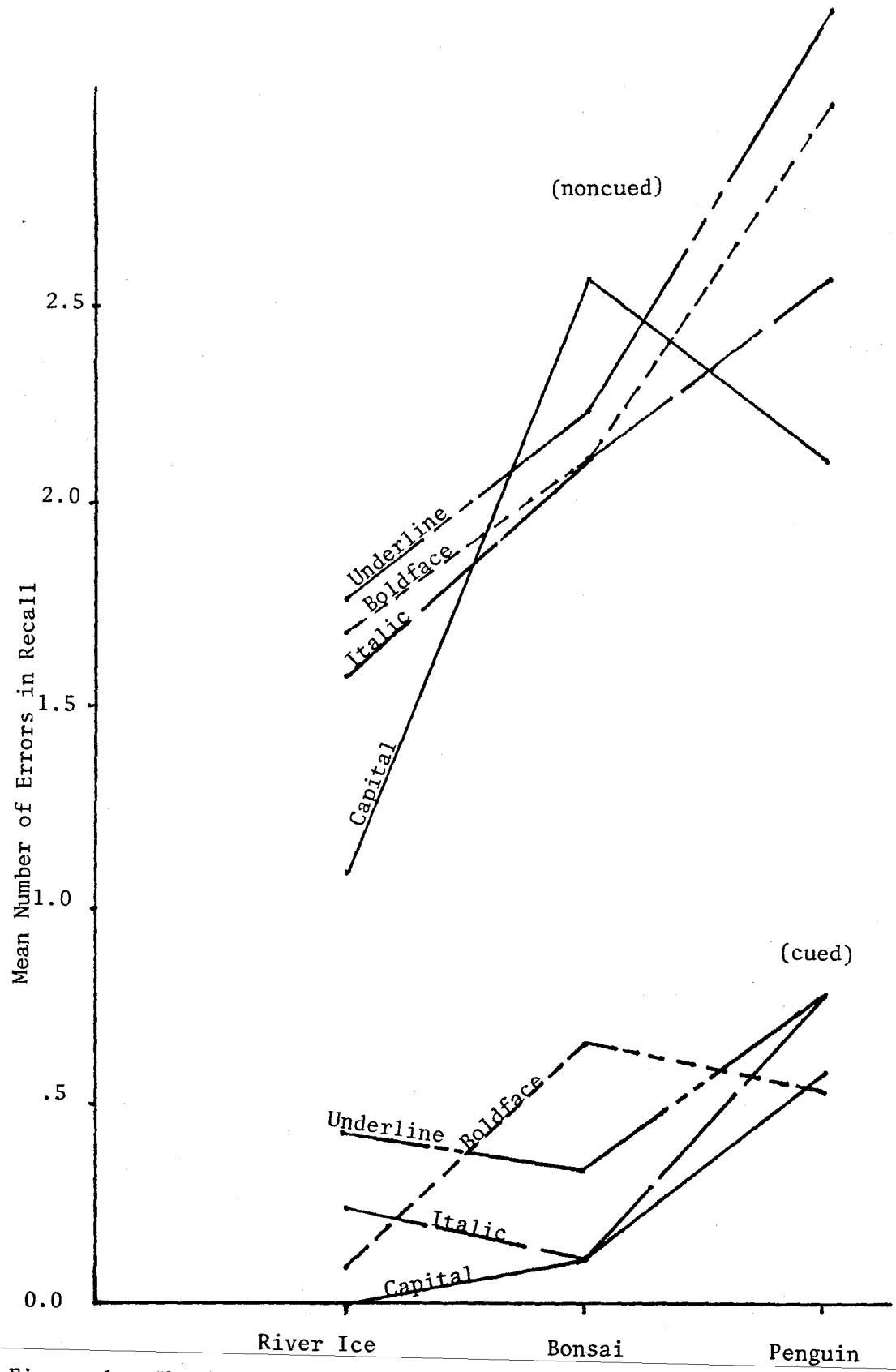

Figure 6. The isolation effect for cueing techniques across articles.

Table 8

Results of Selectively Withholding Cueing Technique

Data form the Article by Cueing Technique Analyses.

Cueing Technique Withheld	Effect Removed	
	Article Effect	Interaction
Capital Letter Data	no	no
Boldface Letter Data	no	yes
Underline Letter Data	no	no
Italic Letter Data	no	no

Table 9

ANOVA for the Noncued Condition of Cueing Techniques and Article Effects.

Source	df	MS	F
Between Subjects	11		
cueing technique (A)	3	.404	5.941**
error	8	.068	
Within Subjects	24		
article (B)	2	4.366	4.707*
AxB	6	.366	.389
error	16	.928	
Total	35		

*$p < .05$

**$p < .025$

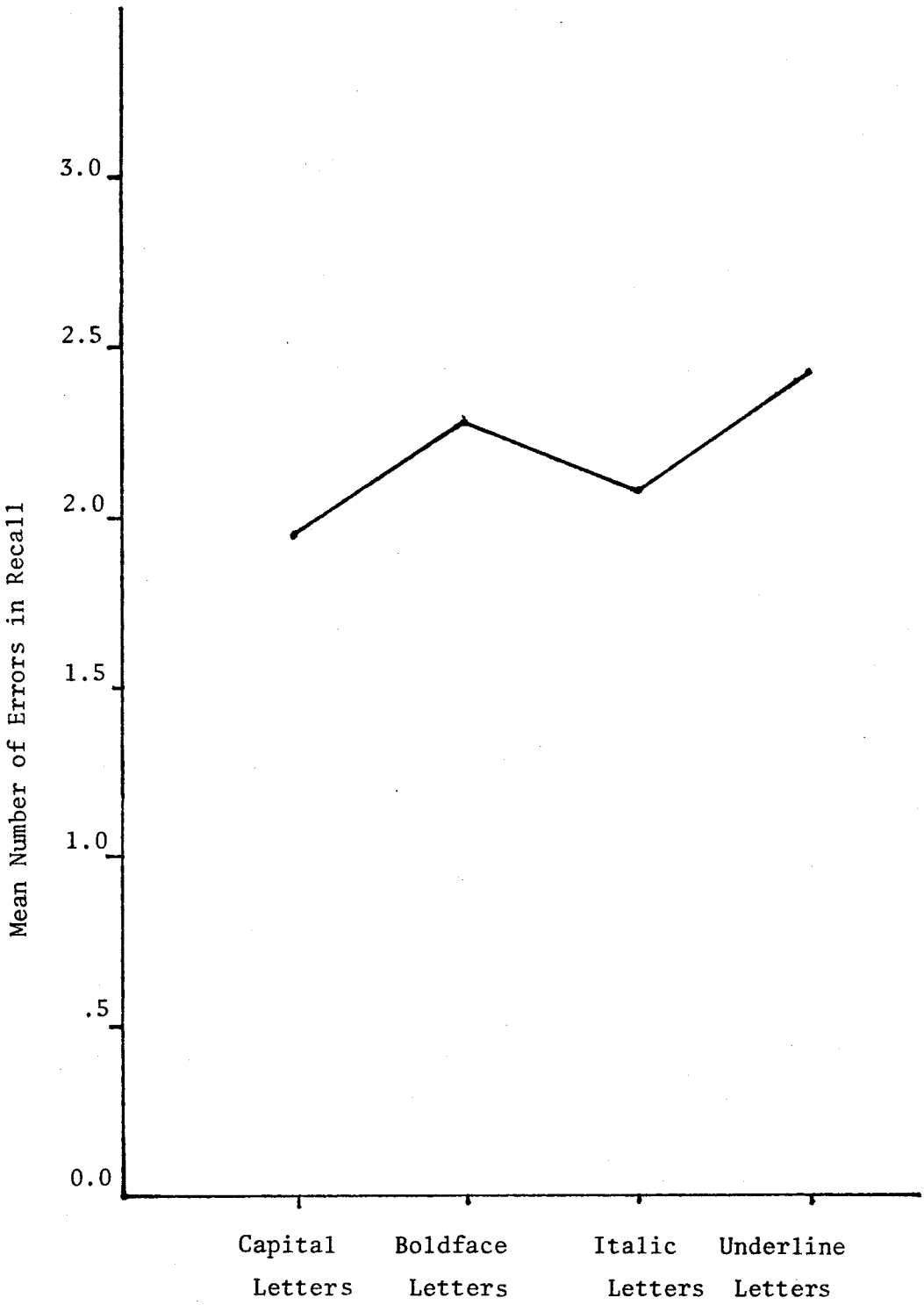

Figure 7

Marginal Means of the Cueing Techniques for the Noncued Condition.

the penguin article resulted in a higher mean number of errors and thus was considered more difficult than either the bonsai or the river ice articles.

Discussion

The results of this experiment, in general, are in agreement with the body of typographic research, although the results may be limited in their generalizability.

Material Type

Since there were no significant differences in recall of the three types of information between cued and noncued material, it can be assumed that all four cueing techniques were equally effective in cueing all of the information types. The information type was used as a variable because of the growing support (Leicht and Cashen,1972;Hershberger and Terry,1965) that recall differed as a function of the type of information cued. Leicht and Cashen also found a marginally significant interaction between the type of information cued and the cueing technique used (underlining). No such interaction was found in this study however.

A significant material type main effect was also expected based on earlier studies (Hershberger and Terry;Rickards and August,1975). One possible explaination for the lack of a material type main effect may be the difficulty in chosing concrete examples for each of the material types. Despite two independent judges agreeing upon the selected principles, examples and trivia items, the cued materials may not have been sufficiently different to result in a different number of items recalled. It is also possible that the effect of the cueing may enhance principle retention and/or reduce the retention of less important information for

a longer-term memory task (Hershberger and Terry,1965) than for the short-term memory task used in the present study. The article effect may also have contributed enough variance to mask any effect of the material type.

Isolation Effect

The isolation effect (cued vs noncued) was significant for all cueing techniques, supporting the main hypothesis and the research results that indicate typographic cueing is a useful aid for cued material recall. Each of the cueing techniques - capitalized print, boldfaced print, italicized print and underlined print - were equally effective as typographic cueing techniques for the cued material.

Earlier research reported that capitalized print is less effective for cueing than other print styles (Paterson and Tinker,1945) especially compared to boldfaced print (Foster and Coles,1977). Although the results contradict the Foster and Coles findings, differences between the studies may account for this discrepancy. Foster and Coles used a single long article of approximately 1,000 words. They also cued approximately 30% of the article in contrast to the current study in which only 3 to 4% of the total words were cued. Foster and Coles thus cued approximately one out of every three words. This is a different concept of "isolation" than utilized in the current study.

Another difference is in the overall word size of the capitalized condition. Foster and Coles typeset their materials. In typesetting, the capitalized words require more line space than lowercase words. Recent research by Phillip (1979) suggests that the longer length required by typeset capitalized words may be one of the factors that causes a

detrimental effect for capitalized print conditions. This then, may account for the different results between this study and that of Foster and Coles (1977).

The boldfaced print and the underlined print resulted, as expected, in a positive isolation effect as was reported in other studies (Cashen and Leicht,1970;Foster and Coles,1977). The boldfaced print was, in the experiment, a source of interaction with the article variable for the cued material. One possible explaination for this was an apparent discrepancy in the materials. Despite careful preparation, some of the boldfaced cueing for the bonsai article does not appear to be consistently as dark as the boldfaced print for the other articles, as illustrated by the examples in Appendix B.

The boldfaced print should not necessarily be considered less effective than the capitalized print condition for enhancing the retention of noncued material. The effect, either positive or negative, of the boldfaced print and the other cueing techniques is not really known so that the "true" strength of the boldface print can not be postulated. The removal of the boldfaced data eliminated the cueing technique by article interaction for the cued material. Thus there appears to have been sufficient "boldness" to create an isolation effect, yet the isolation effect was sensitive to the amount of "boldness".

The italicized print, although often used in practice to cue material, has not been studied as a typographic cue. The results of this study indicate that italicized print, within the limitations of this study, is a good typographic cueing technique.

Previous studies report differing effects of cueing upon noncued

material retention. Within the context of each subject serving as their own control, this study found significantly different effects upon noncued material by the different cueing techniques. The marginal mean of the underlined technique was significantly different from the capitalized and the italicized print noncued conditions, and as earlier suggested, should be significantly different from the boldface condition as well. Thus the capitalized and italicized cueing techniques appear to be significantly better in aiding noncued material retention than the underlined cueing technique. Since there was not a control group which received no cueing, the effect of the cueing upon the noncued material cannot be classified as decremental or beneficial for retention.

Several of the studies which used a control condition (no cueing) found no decrement in the learning of noncued material retention (Rickards and August,1975;Cashen and Leicht,1970). Foster and Coles (1977) found a trade-off of learing the cued at the expense of the noncued only for the capitalized print and not for the boldfaced print. Glynn and Di Vesta also found a trade-off but used underlining as the cueing technique compared to the control condition.

Thus it is obvious that further research is required to provide a more concrete data base relative to the effectiveness of the different cueing techniques for noncued material as well as the cued material.

Summary

This study provides support to the hypothesis that the four cueing techniques used in this study are effective in producing an isolation effect and result in increased retention for the cued material. The results also indicate that recall for noncued material within the cued

conditions was significantly different for capitalized and italicized when compared to the underlined print condition. The relationship of cueing technique and cued vs noncued was found to be affected differently by the different articles- whether article content or another parameter such as different levels of difficulty was the source is not known. There was, however, no support for the hypothesis that material types and cueing techniques interact significantly.

Future Research

Article length is still a relatively unstudied variable. Isolation effects were found using the 300 word article length, but no significant differences were found between cueing techniques for the cued material or for the different material types. Significant differences, however, have been found at the 1,000 word article length by other investigators. Thus more research is necessary to investigate the effects of article length on the isolation effect.

Similarily, the cueing techniques need to be studied further. In particular, data on the optimal amount of cueing within an article as well as data on the maximal level at which cueing still produces an isolation effect, would be useful. Research is also needed to determine if one cueing method is superior to the other cueing techniques for different amounts of cueing.

The effect of cueing upon the noncued material is also another area for future studies. The effect of cueing upon the noncued material may be one way to select optimal cueing techniques if there are no significant differences between the cueing techniques for the cued material.

Finally, there are a variety of additional factors to consider,

including the effect of retention interval, the amount of study time for each trial, study techniques and the relationship of the degree to which the subject is aware of the cueing to the isolation effect and how the noncued retention is affected.

References

Ashton, George D.. River ice, American Scientist, 1979, 67, 38-45.

Bonsai Culture and Care of Miniature Trees. Jack McDowell (ed.).Menlo Park, California; Lane Books, 1969.

Cashen, Valjean M., & Leicht, Kenneth L.. The role of isolation effect in a formal educational setting. Journal of Educational Psychology, 1970, 61, 484-486.

Coles, Peter, & Foster, Jeremy. Typographic cueing as an aid to learning from typewritten text. Programmed Learning and Educational Technology, 1975, 12, 102-108.

Crouse, James H., & Idstein, Peter. Effects of encoding cues on prose learning. Journal of Educational Psychology, 1972, 63, 309-313.

Epidemic of senility; Alzheimer's disease or presenile dementia.Newsweek, November 5,1979,p.95.

Foster, Jeremy, & Coles, Peter. An experimental study of typographic cueing in printed text. Ergonomics, 1977, 20, 57-66.

Fowler, R.L., & Barker, A.S.. Effectiveness of highlighting for retention of text material. Journal of Applied Psychology, 1974, 59, 358-364.

Glynn, Shawn M., & Di Vesta, Francis J.. Control of prose processing via instructional and typographic cues. Journal of Educational Psychology, 1979, 14, 65-73.

Hartley, James & Burnhill, Peter. Fifty guide-lines for improving instructional text. Programmed Learning and Educational Psychology, 1977, 14, 65-73.

Hershberger, Wayne A., & Terry, Donald F.. Typographical cuing [sic] in conventional and programed [sic] texts. Journal of Applied Psychology, 1965, 49, 55-60.

Idstein, P., & Jenkins, J.R., Underlining versus repetitive reading. Journal of Educational Research, 1972, 65, 321-323.

Keppel, Geoffrey. Design and Analysis: A Researcher's Handbook. Berkeley, California: Prentice Hall,1973.

Le Maho, Yvon. The emperor penguin: a strategy to live and breed in the cold. American Scientist, 1977, 65, 680-693.

Leicht, Kenneth L., & Cashen, Valjean M.. Type of highlighted material and examination performance, Journal of Educational Research,1972, 65, 315-316.

Paterson, Conald G., & Tinker, Miles A.. Readability of mixed typeforms, Journal of Applied Psychology, 1945, 29, 631-637.

Phillips, R.J.. Why is lowercase better?. Applied Ergonomics, 1979, 10, 211-214.

Poulton, E.C.. Asymmetrical transfer in reading texts produced by teleprinter and by typewriter. Journal of Applied Psychology, 1969, 53, 244-249.

Poulton, E.C.. Size,style and vertical spacing in the legibility of small typefaces. Journal of Applied Psychology, 1970,54,156-161.

Rickards, J.P., & August, G.J.. Generative underlining strategies in prose recall. Journal of Educational Psychology, 1975, 67, 860-865.

Webster's Seventh New Collegiate Dictionary. Springfield, Massachusetts: G. & C. Merriam Company, 1970.

Appendix A

Appendix A is comprosed of the following materials for each of the articles presented to the subjects in this experiment:

1) text of the article,

2) list of the idea segments cued in the article,

3) list of the questions used for that article.

Each article provides an example of the cueing techniques used in the experiment. An additional copy of the emperor penguin article illustrates the fourth cueing technique.

The emperor penguin broods its eggs and raises its young during the severe Antarctic winter,when ambient temperatures may drop as low as about -48°C— presumably colder breeding conditions than any other bird can tolerate.
Studies on fossil penguins and paleotemperatures suggest that penguins are primarily birds of cold temperate to subtropical environments (see Simpson,1946).As Stonehouse pointed out,some genera would have penetrated southward and succeded in the sub-Antarctic and Antarctic environments.Thus the emperor represents the furthest evolutionary stage toward cold adaptation.The only living relative of the emperor penguin in the same genus,the king penguin, breeds in the more temperate climate of the sub-Antarctic islands where the lowest ambient temperatures are usually around -5°C(temperatures as low as -10°C have been recorded).A comparison of the two species should allow us to understand which vital biological characteristics of the emperor enable it to live and breed in a colder climate.
The largest living penguin,the emperor, has a body mass ranging from about 20 to 40 kg,twice that of the king penguin,which weighs about 10 to 20 kg,and nearly 30 times that of the smallest penguin, the blue penguin.As a rough estimate, the emperor's body length is about 1 m, while the king and the blue are approximately .8 and .35 m long, respectively. It is impossible to give a precise body length for penguins:their size depends upon their behavior.An emperor penguin standing still in the cold,supported on its heels (intratarsal joints) and its tail and pulling in its head,may be less than .8 m high,while a walking emperor extending its neck,may be as tall as 1.3 m.

The emperor penguin broods its eggs and raises its young during the severe Antarctic winter,when ambient temperatures may drop as low as about -48°C— presumably colder breeding conditions than any other bird can tolerate.
Studies on fossil penguins and paleotemperatures suggest that penguins are primarily birds of cold temperate to subtropical environments (see Simpson,1946).As Stonehouse pointed out,some genera would have penetrated southward and succeded in the sub-Antarctic and Antarctic environments.Thus the emperor represents the furthest evolutionary stage toward cold adaptation.The only living relative of the emperor penguin in the same genus,the **king penguin, breeds** in the **more temperate** climate of the **sub-Antarctic** islands where the lowest ambient temperatures are usually around -5°C(temperatures as low as -10°C have been recorded).A comparison of the two species would allow us to understand which vital biological characteristics of the emperor that enable it to live and breed in a colder climate.
The largest living penguin,the emperor, has a body mass ranging from about 20 to 40 kg,twice that of the king penguin,which weighs about 10 to 20 kg, and nearly 30 times that of the smallest penguin, the blue penguin.As a rough estimate, the emperor's body length is about 1 m, while the king and the blue are approximately .8 and .35 m long,respectively.
It is impossible to give a precise body length for penguins: their size depends upon their behavior.An **emperor penguin standing still** in the cold,supported on its heels (intratarsal joints) and its tail,and pulling in its head,may be **less** than .8 m high,while a walking emperor extending its neck,may be as tall as 1.3 m.

Idea segments cued in the emperor penguin article

Principles

Version A

1. ...primarily birds of cold temperate to subtropical...
2. ...largest living penguin, the emperor...

Version B

1. ...emperor...furthest evolutionary stage toward cold adaptation...
2. ...size depends upon their behavior...

Examples

Version A

1. ...succeded in the sub-antarctic and antarctic...
2. ...boby mass...twice that of the king...

Version B

1. King penguin, breeds...more temperate...sub-antarctic...
2. ...emperor penguin standing still...less...

Trivia

Version A

1. ...see Simpson, 1946...
2. ...body length is about 1 m...

Version B

1. ...temperatures are usually around -5°C.
2. ...blue are approximately...35 cm long.

Penguin Article Questions

1. Penguins are primarily birds of:
   a) arctic to antarctic environments
   b) cold temperate to sub-tropical environments
   c) subarctic to subantarctic environments
2. True or False:
   The emperor penguin represents the furthest evolutionary stage toward cold adaption.
3. The largest living penguin is the:
   a) king penguin
   b) emperor penguin
   c) blue penguin
   d) imperial penguin
4. It is impossible to give precise body lengths for penguins because:
   a) individual variation due to the harsh environment
   b) the are difficult to catch
   c) body size depends upon their behavior
   d) ages are difficult to determine
5. True or False:
   Some genera of penguins have penetrated southward and succeded in the sub-antarctic and antarctic environments.
6. The king penguin breeds:
   a) in the more temperate sub-antarctic
   b) in the less temperate sub-antarctic
   c) in the more temperate tropics
   d) in the less temperate arctic
7. The emperor penguin has a body mass :
   a) twice that of the king penguin
   b) twice that of the imperial penguin
   c) twice that of the blue penguin
   d) twice that of the tropic penguin
8. True or False:
   An emperor penguin standing still in the cold is shorter than a walking emperor penguin.
9. True or False:
   That penguins are primarily birds of cold temperate to sub-tropical environments is the work of Simpson,1946.

10.The lowest ambient temperature of the sub-antarctic islands are usually around:

a) -20 C

b) -5 C

c) -30 C

d) 0 C

11. True or False:

A rough estimate of the emperor penguin's body length is about 1 meter

12. A rough estimate of .35 meter is an approximate height for the

a) emperor penguin

b) blue penguin

c) king penguin

d) imperial penguin

Water is one of the most intriguing substances on earth.Not only is man dependent upon it for life,but it also has the interesting property that its freezing point is within the range of the earth's surface temperature variation for significant parts of the year.Although river ice forms ONLY A TINY FRACTION of the total quantity of ice in the world,it has significance largely because man has tended to congregate near rivers and use them for transport of goods,as a source of potable water, and all too often,as a receptacle for human generated waste.Waste thermal ene energy is also desposed of in rivers as an inexpensive means of eventually transferring it to the atmosphere.The presence of ice on and in a river not only interferes with these uses but often causes damage by flooding to LEVELS TWICE AND EVEN MORE than would be caused by the same magnitude of flow if the ice were not present.

Ice forms when water is cooled to 0°C and continues to lose heat.Generally this happens when the air temperature falls below 0°C.Because of thermal inertia,larger rivers reach this temperature somewhat later in the early winter than do smaller rivers.The time difference is not great however,and the diurnal air temperature cycle often causes ice to form during the night,only to be melted the following day,until, eventually enough ice is formed,or the daytime temperatures are low enough,for an ice cover to form.The extent and duration of ice covers during the winter season have been recorded and mapped,and we have a reasonable picture of their average behavior from year to year in the Northern Hemisphere.This average picture obscures the extreme variability in the types and occurances of river ice.

Idea segments cued in the river ice article

Principles

Version A

1. ...man...congregate near rivers...
2. Ice forms when water is cooled to 0°C.

Version B

1. ...presence of ice...causes damage by flooding.
2. ...melted the following day, until, eventually enough ice is formed.

Examples

Version A

1. ...use ...for transport of goods...
2. ...when the air temp falls...

Version B

1. ...source of potable water...
2. ...larger rivers reach this temperature...later...

Trivia

Version A

1. ...only a tiny fraction...
2. ...levels twice and even more...

Version B

1. ...significant part of the year.
2. ...inexpensive means...transferring it to the atmosphere.

River ice questions

1. River ice has significance largely because:
   a) it is useful as a commercial product
   b) man has tended to congregate near rivers
   c) the thickness of the ice allows for recreational use
   d) it is such a large part of the ice of the world
2. The presence of ice on a river not only interferes with the uses of the river, but often:
   a) causes damage by flooding to levels more than if the ice was not present
   b) causes damage by freezing plant life
   c) is dangerous to humans and wildlife attempting to cross the slippery surface
   d) causes damage because the weight of the ice deepens the riverbeds
3. True or False:
   Ice forms when water is cooled to 32 C.
4. The diurnal air temperature cycle causes ice to form each night and melt each day until:
   a) the time difference is not great
   b) enough ice is formed
   c) the night temperatures are cooler
   d) the river current is stopped
5. True or False:
   Man uses rivers as a source of potable water.
6. True or False:
   Man uses rivers for transport of goods.
7. Ice forms when water is cooled and continues to lose heat. This generally occurs when:
   a) land temperature falls below 0 C
   b) air temperature falls below 0 C
   c) water temperature falls below 0 C
8. Due to thermal inertia, the tempertature for ice to form in:
   a) larger rivers in reached somewhat later in early winter
   b) smaller rivers is reached somewhat later in early winter

9. The adverage picture of the ice cover durations:
   a) enhances the slight variability of river ice
   b) enhances the extreme variability of river ice
   c) obscures the slight variability of river ice
   d) obscures the extreme variability of river ice

10. True or False:
    River ice forms a significant fraction of the total quantity of ice in the world.

11. Waste thermal energy is dispised of in rivers as:
    a) a means of transferring it to the stmosphere
    b) an economic boom for shellfish growers
    c) an means of regulating river temperatures

12. Water is interesting because its freezing point is within the earth's surface temperature for:
    a) significant parts of the year
    b) approximately 34.76% of the earth's surface
    c) one half of the world's population

Just as many people claim to have a best profile,a bonsai has an aspect that is the best for viewing.The planting and all shaping are done with the front of the tree in mind.A tree is always displayed-*either singly or with other trees*-with its front to the front. When bonsai are displayed at shows one of the most important points of judging is the front of a tree.

Before transferring a plant from a nursery can to a container and starting its training as a bonsai,be sure to establish the front of a tree.When you start a seedling or a cutting on the road to becomming a bonsai,always train it with the front in mind.In considering a tree in the wild,inspect it on all sides to determine the front.A plant that does not have a real front will seldom make a good bonsai.

The front should show a good view of the main trunk.Often the largest part of the trunk should be seen.The main trunk must be clearly visible from the base to the first branch,and it must also show for a good portion of the height of the tree. The *upper portion of the trunk* should have a *slight forward lean*.

Heavy foliage or clusters of fruit or blossoms are not necessarily front determining characters.Everywhere on the tree,but most especially from the front, there must be a good balance among branches and a good relationship between branches and container.No part of a branch should extend across the trunk.Dimension is given a tree by its branches.A bonsai should not look flat,like an espaliered plant.Also a tree should not appear lopsided or top heavy because of bad distribution of fruits or flowers.

Bonsai Article

Idea segments cued in the bonsai article

Principles

Version A

1. ...establish the front...

2. ...front should show a good view of...main trunk.

Version B

1. ...always displayed...front to the front.

2. ...not necessarily front determinig chatacters.

Examples

Version A

1. ...train it with...front in mind.

2. ...main trunk...clearly visible from the base to...first branch.

Version B

1. ...wild,inspect it...determine the fornt.

2. No part of a branch...extend across the trunk.

Trivia

1. ...either singly or with other trees...

2. ...upper portion of the trunk...slight forward lean,

Version B

1. ...seedling or a cutting...

2. ...largest part of the trunk should be seen.

Bonsai questions

1. Before beginning a bonsai, it is important to:
   a) transplant the plant into the pot desired
   b) establish the front of the tree
   c) prune unnecessary foliage
2. A bonsai is always displayed:
   a) so the tree can be seen from all sides
   b) with other trees
   c) with the front at an advantageous angle
   d) with the front to the front
3. True or False:
   The front should show as little of the trunk as necessary.
4. The vitally important front-determining character are:
   a) foliage
   b) fruit clusters
   c) blossom clusters
   d) the trunk
5. True or False:
   The bonsai does not need to be trained,from the beginning,with the front in mind.
6. True or False:
   Wild trees generally do have a good front.
7. The trunk must be clearly visible from:
   a) the base to the first curve in the trunk
   b) the roots to the first curve in the trunk
   c) the base to the first branch
   d) the roots to the first branch
8. True or False:
   No part of a branch should extend across the trunk.
9. True or False:
   Bonsai are displayed iether singly or with other trees.
10. Bonsai are started from:
   a) seedlings
   b) seedlings and cuttings
   c) seedlings, cuttings and roots

11. The upper portion of the bonsai trunk should:
    a) be straight
    b) lean slightly backwards
    c) lean slightly forwards
    d) vary with the individual tree
12. Wild trees for bonsai should be:
    a) throughly inspected
    b) inspected for a front view
    c) inspected for the correct number of branches

Appendix B

Appendix B contains examples of the boldfaced cueing technique for each article. The boldfaced cueing for the bonsai article appears to be less "bold" than for the other articles.

Just as many people claim to have a best profile,a bonsai has an aspect that is the best for viewing.The planting and all shaping are done with the front of the tree in mind.A tree is always displayed-either singly or with other trees-with its front to the front. When bonsai are displayed at shows one of the most important points of judging is the front of a tree.

Before transferring a plant from a nursery can to a container and starting its training as a bonsai,be sure to establish the front of a tree.When you start a seedling or a cutting on the road to becomming a bonsai,always train it with the front in mind.In considering a tree in the wild,inspect it on all sides to determine the front.A plant that does not have a real front will seldom make a good bonsai.

The front should show a good view of the main trunk.Often the largest part of the trunk should be seen.The main trunk must be clearly visible from the base to the first branch,and it must also show for a good portion of the height of the tree. The upper portion of the trunk should have a slight forward lean.

Heavy foliage or clusters of fruit or blossoms are not necessarily front determining characters.Everywhere on the tree,but most especially from the front, there must be a good balance among branches and a good relationship between branches and container.No part of a branch should extend across the trunk.Dimension is given a tree by its branches.A bonsai should not look flat,like an espaliered plant.Also a tree should not appear lopsided or top heavy because of bad distribution of fruits or flowers.

Bonsai Article

The emperor penguin broods its eggs and raises its young during the severe Antarctic winter,when ambient temperatures may drop as low as about -48°C— presumably colder breeding conditions than any other bird can tolerate.
Studies on fossil penguins and paleotemperatures suggest that penguins are **primarily birds of cold temperate to subtropical** environments (see Simpson,1946).As Stonehouse pointed out,some genera would have penetrated southward and succeded in the sub-Antarctic and Antarctic environments.Thus the emperor represents the furthest evolutionary stage toward cold adaptation.The only living relative of the emperor penguin in the same genus,the king penguin, breeds in the mote temperate climate of the sub-Antarctic islands where the lowest ambient temperatures are usually around -5°C(temperatures as low as -10°C have been recorded).A comparison of the two species should allow us to understand which vital biological characteristics of the emperor enable it to live and breed in a colder climate.
The **largest living penguin,the emperor**, has a body mass ranging from about 20 to 40 kg,twice that of the king penguin,which weighs about 10 to 20 kg,and nearly 30 times that of the smallest penguin, the blue penguin.As a rough estimate, the emperor's body length is about 1 m, while the king and the blue are approximately .8 and .35 m long,respectively. It is impossible to give a precise body length for penguins:their size depends upon their behavior.An emperor penguin standing still in the cold,supported on its heels (intratarsal joints) and its tail and pulling in its head,may be less than .8 m high,while a walking emperor extending its neck,may be as tall as 1.3 m.

Water is one of the most intriguing substances on earth.Not only is man dependent upon it for life,but it also has the interesting property that its freezing point is within the range of the earth's surface temperature variation for significant parts of the year.Although river ice forms only a tiny fraction of the total quantity of ice in the world,it has significance largely because man has tended to congregate near rivers and use them for transport of goods,as a source of potable water, and all too often,as a receptacle for human generated waste.Waste thermal energy is also desposed of in rivers as an inexpensive means of eventually transferring it to the atmosphere.The presence of ice on and in a river not only interferes with these uses but often causes damage by flooding to levels twice and even more than would be caused by the same magnitude of flow if the ice were not present.

Ice forms when water is cooled to 0°C and continues to lose heat.Generally this happens when the air temperature falls below 0°C.Because of thermal inertia,larger rivers reach this temperature somewhat later in the early winter than do smaller rivers.The time difference is not great however,and the diurnal air temperature cycle often causes ice to form during the night,only to be melted the following day,until, eventually enough ice is formed,or the daytime temperatures are low enough,for an ice cover to form.The extent and duration of ice covers during the winter season have been recorded and mapped,and we have a reasonable picture of their average behavior from year to year in the Northern Hemisphere.This average picture obscures the extreme variability in the types and occurances of river ice.

List of Tables

List of Figures

The Relative Effectiveness of Four Typographic Cueing Techniques

Introduction

Typographic cueing is a technique which is used to emphasize selected material and has been used as long as people have utilized written material. The most common methods of cueing include both type style variation and underlining. Variations in type style have ranged from the use of boldface and capital letter prints to the use of italics and novelty print. Regardless of the specific cueing technique used, the application involves the isolation of selected material within the general text.

The use of typographic cueing to isolate material has been shown to effect recall of the cued material. This "isolation effect" was originally found by von Restorff in the 1930's (Cashen and Leicht, 1970, p. 484).

Cueing research is important because it is aimed at optimizing the written form of communication. The implications for education, both academic and industrial, cannot be overemphasized. Optimal cueing depends upon factors such as human visual ability, learning ability, type style, practicality and cost.

An understanding of basic typographic nomenclature is necessary to fully understand typographic cueing research. Figure 1 illustrates the principle terms utilized.

- the base line is the line on which all of the letters are printed.
- the cap height is the height above the base line that marks the